BUILT-IN DOUBLEOVEN

BDO 9400 WG

User Manual

Blomberg

Please read this user manual first!

Dear Customer,
Thank you for purchasing this Blomberg product. We hope that you get the best results from your product which has been manufactured with high quality and state-of-the-art technology. Therefore, please read this entire user manual and all other accompanying documents carefully before using the product and keep it as a reference for future use. If you handover the product to someone else, give the user manual as well. Follow all warnings and information in the user manual.
Remember that this user manual is also applicable for several other models. Differences between models will be identified in the manual.

Explanation of symbols
Throughout this user manual the following symbols are used:

Important information or useful hints about usage.

Warning of hazardous situations with regard to life and property.

Warning of electric shock.

Warning of risk of fire.

Warning of hot surfaces.

Arçelik A.Ş.
Karaağaç caddesi No:2-6
34445 Sütlüce/Istanbul/TURKEY
Made in TURKEY

CE

TABLE OF CONTENTS

1 Important instructions and warnings for safety and environment 4

General safety....4
Electrical safety....4
Product safety....5
Intended use....6
Safety for children....6
Disposing of the old product....7
Package information....7

2 General information 8

Overview....8
Package contents....9
Technical specifications....10

3 Installation 11

Before installation....11
Installation and connection....13
Future Transportation....14

4 Preparation 15

Tips for saving energy....15
Initial use....15
Time setting....15
First cleaning of the appliance....16
Initial heating....16

5 How to operate the oven 17

General information on baking, roasting and grilling....17
How to operate the electric oven....17
Operating modes....18
Using the oven clock....19
Using the keylock....20
Using the clock as an alarm....20
Cooking times table....21
How to operate the top oven....22
Cooking times table....23
How to operate the top grill....24
Top oven cooking times table for grilling....24

6 Maintenance and care 25

General information....25
Cleaning the control panel....25
Cleaning the oven....25
Removing the oven door....26
Removing the door inner glass....26
Replacing the oven lamp....27

7 Troubleshooting 28

8 Guarantee and Service 29

1 Important instructions and warnings for safety and environment

This section contains safety instructions that will help protect from risk of personal injury or property damage. Failure to follow these instructions shall void any warranty.

General safety

- This appliance can be used by children aged from 8 years and above and persons with reduced physical, sensory or mental capabilities or lack of experience and knowledge if they have been given supervision or instruction concerning use of the appliance in a safe way and understand the hazards involved.
  Children shall not play with the appliance. Cleaning and user maintenance shall not be made by children without supervision.
- Installation and repair procedures must always be performed by Authorized Service Agents. The manufacturer shall not be held responsible for damages arising from procedures carried out by unauthorized persons which may also void the warranty. Before installation, read the instructions carefully.
- Do not operate the product if it is defective or has any visible damage.
- Control that the product function knobs are switched off after every use.

Electrical safety

- If the product has a failure, it should not be operated unless it is repaired by the Authorized Service Agent. There is the risk of electric shock!
- Only connect the product to a grounded outlet/line with the voltage and protection as specified in the “Technical specifications”. Have the grounding installation made by a qualified electrician while using the product with or without a transformer. Our company shall not be liable for any problems arising due to the product not being earthed in accordance with the local regulations.
- Never wash the product by spreading or pouring water onto it! There is the risk of electric shock!
- The product must be unplugged during installation, maintenance, cleaning and repairing procedures.
- If the power connection cable for the product is damaged, it must be replaced by the manufacturer, its service agent or similary

qualified persons in order to avoid a hazard.

- Only use the connection cable specified in the “Technical specifications”.
- The appliance must be installed so that it can be completely disconnected from the network. The separation must be provided either by a mains plug, or a switch built into the fixed electrical installation, according to construction regulations.
- Rear surface of the oven gets hot when it is in use. Make sure that the electrical connection does not contact the rear surface; otherwise, connections can get damaged.
- Do not trap the mains cable between the oven door and frame and do not route it over hot surfaces. Otherwise, cable insulation may melt and cause fire as a result of short circuit.
- Any work on electrical equipment and systems should only be carried out by authorized and qualified persons.
- In case of any damage, switch off the product and disconnect it from the mains. To do this, turn off the fuse at home.
- Make sure that fuse rating is compatible with the product.

Product safety

- The appliance and its accessible parts become hot during use. Care should be taken to avoid touching heating elements. Children less than 8 years of age shall be kept away unless continuously supervised.
- Never use the product when your judgment or coordination is impaired by the use of alcohol and/or drugs.
- Be careful when using alcoholic drinks in your dishes. Alcohol evaporates at high temperatures and may cause fire since it can ignite when it comes into contact with hot surfaces.
- Do not place any flammable materials close to the product as the sides may become hot during use.
- During use the appliance becomes hot. Care should be taken to avoid touching heating elements inside the oven.
- Keep all ventilation slots clear of obstructions.
- Do not heat closed tins and glass jars in the oven. The pressure that would build-up in the tin/jar may cause it to burst.
- Do not place baking trays, dishes or aluminium foil directly onto the bottom of the oven. The heat

accumulation might damage the bottom of the oven.
- Do not use harsh abrasive cleaners or sharp metal scrapers to clean the oven door glass since they can scratch the surface, which may result in shattering of the glass.
- Do not use steam cleaners to clean the appliance as this may cause an electric shock.
- Use the shelves as described in "How to operate the electric oven".
- Do not use the product if the front door glass removed or cracked.
- Oven handle is not towel dryer. Do not hang up towel, gloves, or similar textile products when the grill function is at open door.
- Always use heat resistant oven gloves when putting in or removing dishes into/from the hot oven.
- Ensure that the appliance is switched off before replacing the lamp to avoid the possibility of electric shock.

For the reliability of the fire of the product;

- Make sure the plug is fitting to socket as well for not cause to spark.
- Do not use damaged or cutted or extension cable except the original cable.
- Make sure that not whether liquid or moisture on the socket is pluged to product .

Intended use

- This product is designed for domestic use. Commercial use will void the guarantee.
- This appliance is for cooking purposes only. It must not be used for other purposes, for example room heating.
- This product should not be used for warming the plates under the grill, drying towels, dish cloths etc. by hanging them on the oven door handles. This product should also not be used for room heating purposes.
- The manufacturer shall not be liable for any damage caused by improper use or handling errors.
- The oven can be used for defrosting, baking, roasting and grilling food.

Safety for children

- Accessible parts may become hot during use. Young children should be kept away.
- The packaging materials will be dangerous for children. Keep the packaging materials away from children. Please dispose of all parts of the packaging according to environmental standards.
- Electrical products are dangerous to children. Keep children away

from the product when it is operating and do not allow them to play with the product.

- Do not place any items above the appliance that children may reach for.
- When the door is open, do not load any heavy object on it and do not allow children to sit on it. It may overturn or door hinges may get damaged.

Disposing of the old product

Compliance with the WEEE Directive and Disposing of the Waste Product:

This product complies with EU WEEE Directive (2012/19/EU). This product bears a classification symbol for waste electrical and electronic equipment (WEEE).
This product has been manufactured with high quality parts and materials which can be reused and are suitable for recycling. Do not dispose of the waste product with normal domestic and other wastes at the end of its service life. Take it to the collection center for the recycling of electrical and electronic equipment. Please consult your local authorities to learn about these collection centers.

Compliance with RoHS Directive:

The product you have purchased complies with EU RoHS Directive (2011/65/EU). It does not contain harmful and prohibited materials specified in the Directive.

Package information

- Packaging materials of the product are manufactured from recyclable materials in accordance with our National Environment Regulations. Do not dispose of the packaging materials together with the domestic or other wastes. Take them to the packaging material collection points designated by the local authorities.

2 General information

Overview

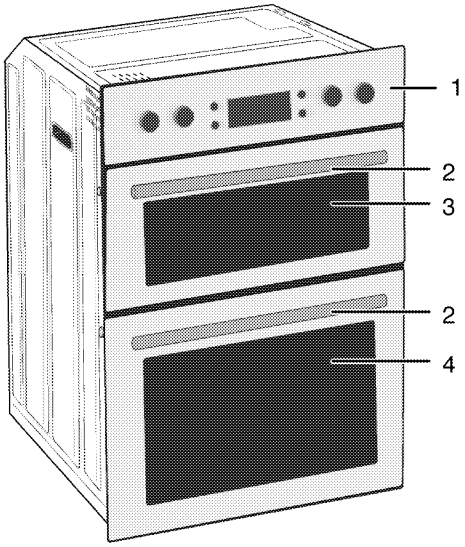

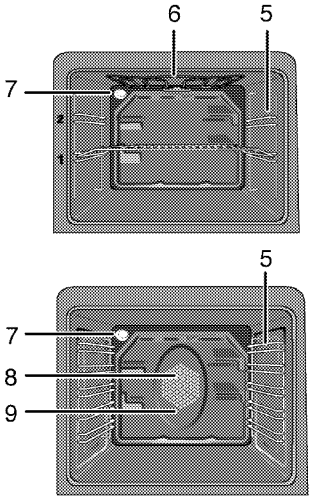

1 Control panel
2 Handle
3 Top oven
4 Main oven
5 Shelf positions
6 Grill heating element
7 Lamp
8 Fan motor (behind steel plate)
9 Ring heater

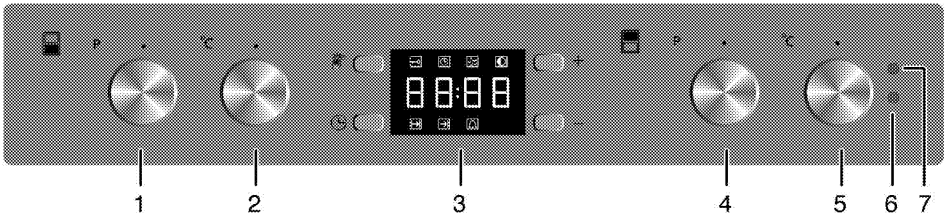

1 Main oven function knob
2 Main oven thermostat knob
3 Digital timer
4 Top oven function knob
5 Top oven thermostat knob
6 Thermostat lamp for main oven
7 Thermostat lamp for top oven

Package contents

Accessories supplied can vary depending on the product model. Not every accessory described in the user manual may exist on your product.

1. User manual
2. Oven tray
   Used for pastries, frozen foods and big roasts.

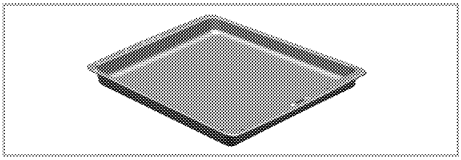

3. Cake tray
   Used for pastries such as cookies and biscuits.

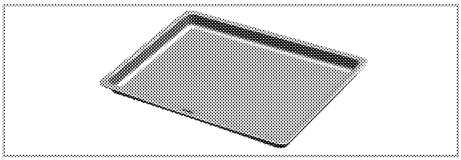

4. Wire Shelf
   Used for roasting and for placing the food to be baked, roasted or cooked in casserole dishes to the desired rack.

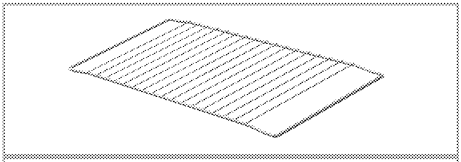

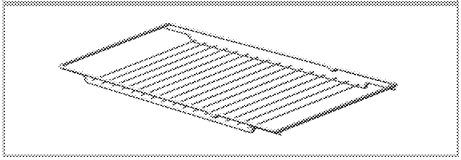

5. Small wire shelf
   It is placed into the tray (if supplied) in order to collect the dripping fat while grilling so that the oven is kept clean.

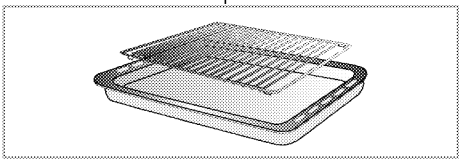

6. Placing the wire shelf and tray onto the telescopic racks properly
   Telescopic racks allow you to install and remove the trays and wire shelf easily. When using the tray and wire shelf with telescopic racks, make sure that the pins at the rear section of the telescopic rack stands against the edges of the wire shelf and tray.

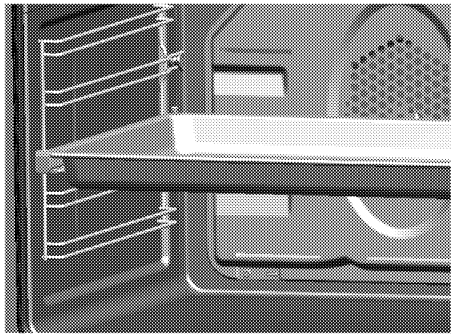

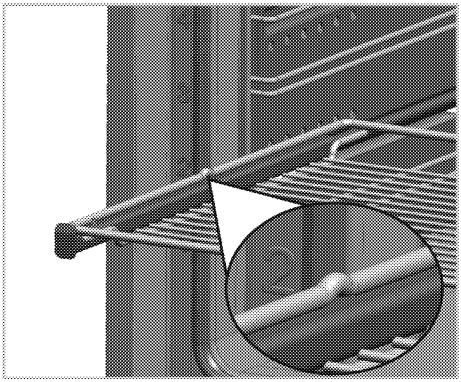

7. **Placing the wire shelf and tray onto the wire racks properly**
Products without telescopic pull-out: With product without a telescopic pull-out, the baking tray and grill are pushed in with their edges between the runners on the side mounts.
It is important to place the wire shelf and/or tray onto the rack properly. Slide the wire shelf or tray between 2 rails and make sure that it is balanced before placing food on it (Please see the following figure).

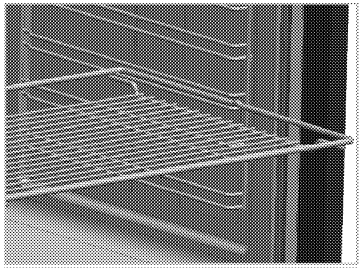

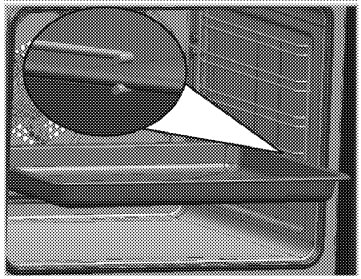

Technical specifications

GENERAL	
Voltage / frequency	220-240 V ~ 50 Hz
Total power consumption	4.2 kW
Fuse	min. 25 A
Cable type / section	H05VV-FG 3 x 2,5 mm^2 or equivalent
Cable length	max. 2 m
OVEN/GRILL	
External dimensions (height / width / depth)	900 mm/594 mm/567 mm
Installation dimensions (height / width / depth)	**890 or 900 mm/560 mm/min. 550 mm
Main oven	**Fan oven**
Energy efficiency class#	A
Inner lamp	15/25 W
Top oven	**Conventional oven**
Energy efficiency class#	A
Inner lamp	15/25 W
Grill power consumption	2.2 kW

Basics: Information on the energy label of electrical ovens is given in accordance with the EN 50304 standard. Those values are determined under standard load with bottom-top heater or fan assisted heating (if any) functions.

** See. *Installation, page 11.*

Technical specifications may be changed without prior notice to improve the quality of the product.

Figures in this manual are schematic and may not exactly match your product.

Values stated on the product labels or in the documentation accompanying it are obtained in laboratory conditions in accordance with relevant standards. Depending on operational and environmental conditions of the product, these values may vary.

3 Installation

Product must be installed by a qualified person in accordance with the regulations in force. The manufacturer shall not be held responsible for damages arising from procedures carried out by unauthorized persons which may also void the warranty.

Preparation of location and electrical installation for the product is under customer's responsibility.

DANGER:
The product must be installed in accordance with all local electrical regulations.

DANGER:
Prior to installation, visually check if the product has any defects on it. If so, do not have it installed.
Damaged products cause risks for your safety.

Before installation

The appliance is intended for installation in commercially available kitchen cabinets. A safety distance must be left between the appliance and the kitchen walls and furniture. See figure (values in mm).

- Surfaces, synthetic laminates and adhesives used must be heat resistant (100 °C minimum).
- Kitchen cabinets must be set level and fixed.
- If there is a drawer beneath the oven, a shelf must be installed between oven and drawer.
- Carry the appliance with at least two persons.
- The following installation drawings are representational and may not match exactly with your appliance.

Do not install the appliance next to refrigerators or freezers. The heat emitted by the appliance will lead to an increased energy consumption of cooling appliances.

The door and/or handle must not be used for lifting or moving the appliance.

If the appliance has wire handles, push the handles back into the side walls after moving the appliance.

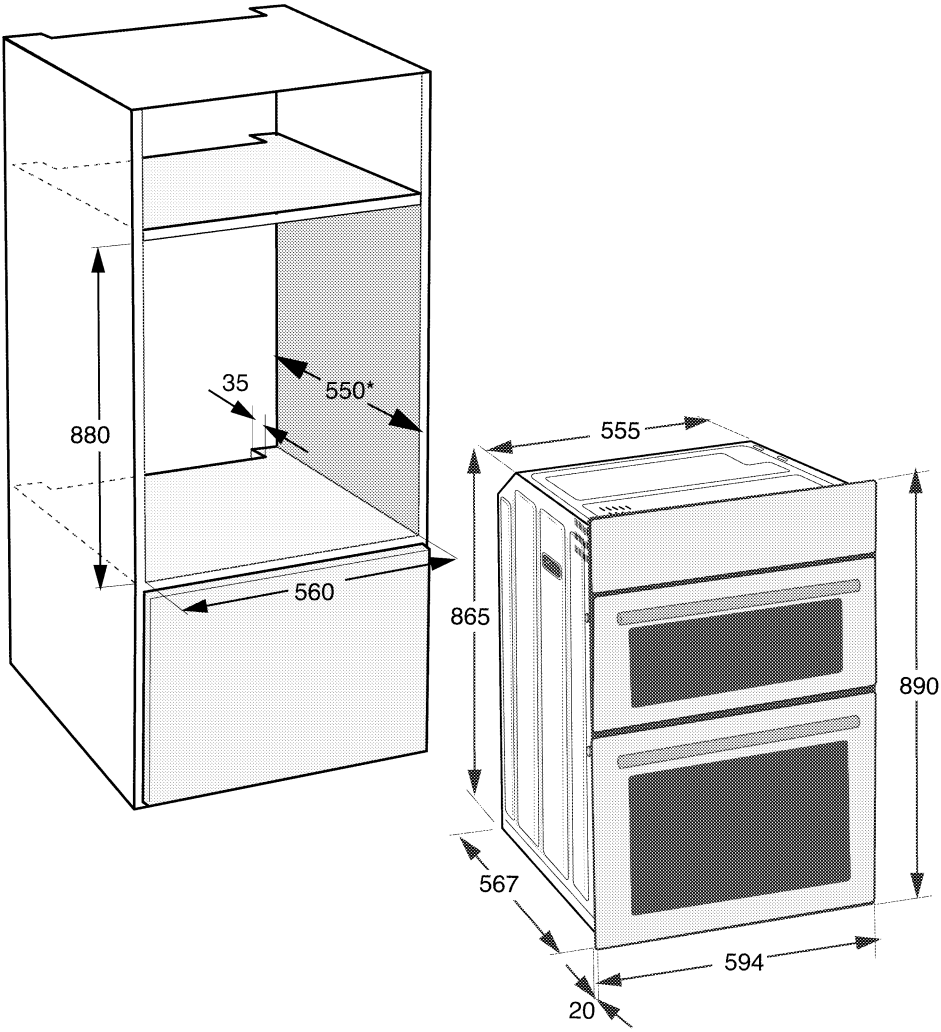

* min.

Installation and connection

- Product can only be installed and connected in accordance with the statutory installation rules.

Electrical connection

Connect the product to a grounded outlet/line protected by a fuse of suitable capacity as stated in the "Technical specifications" table. Have the grounding installation made by a qualified electrician while using the product with or without a transformer. Our company shall not be liable for any damages that will arise due to using the product without a grounding installation in accordance with the local regulations.

DANGER:
The product must be connected to the mains supply only by an authorised and qualified person. The product's warranty period starts only after correct installation.
Manufacturer shall not be held responsible for damages arising from procedures carried out by unauthorised persons.

DANGER:
The power cable must not be clamped, bent or trapped or come into contact with hot parts of the product.
A damaged power cable must be replaced by a qualified electrician. Otherwise, there is risk of electric shock, short circuit or fire!

- Connection must comply with national regulations.
- The mains supply data must correspond to the data specified on the type label of the product. Open the front door to see the type label.
- Power cable of your product must comply with the values in "Technical specifications" table.

DANGER:
Before starting any work on the electrical installation, disconnect the product from the mains supply.
There is the risk of electric shock!

Connecting the power cable

1. If a power cable is not supplied together with your product, a power cable that you would select from the table in accordance with the electrical installation at your home must be connected to your product by following the instructions in cable diagram.

This product must only be connected by a qualified electrician such as a technician from the local electricity company or NICEIC registered contractor to a suitable double-pole control unit with a minimum contact clearance of 3 mm in all poles. This control unit must be installed accordance with the IEE regulation. Failure to obey this instruction may cause operational problems and invalidate the product warranty.

Additional protection by a residual current circuit breaker is recommended.

2. Open the terminal block cover with a screwdriver.
3. Insert the power cable through the cable clamp below the terminal and secure it to the main body with the integrated screw on cable clamping component.
4. Connect the cables according to the supplied diagram.

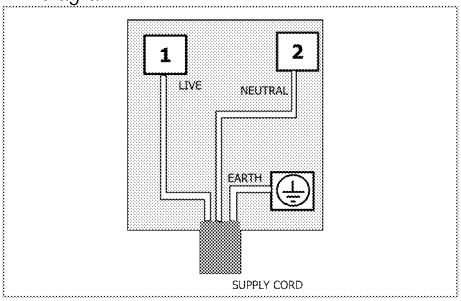

5. After completing the wire connections, close the terminal block cover.
6. Route the power cable so that it will not contact the product and get squeezed between the product and the wall.

Power cable must not be longer than 2 m because of safety reasons.

Installing the product

1. Slide the oven into the cabinet, align and secure it while making sure that the power cable is not broken and/or trapped.

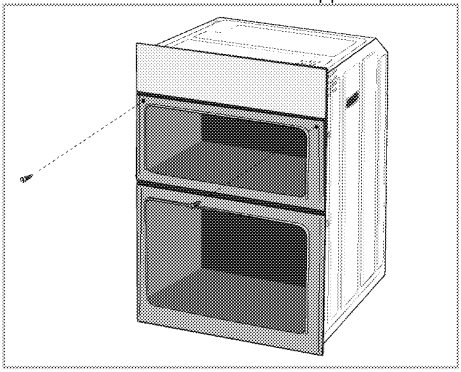

Secure the oven with 2 screws as illustrated.

For products with cooling fan

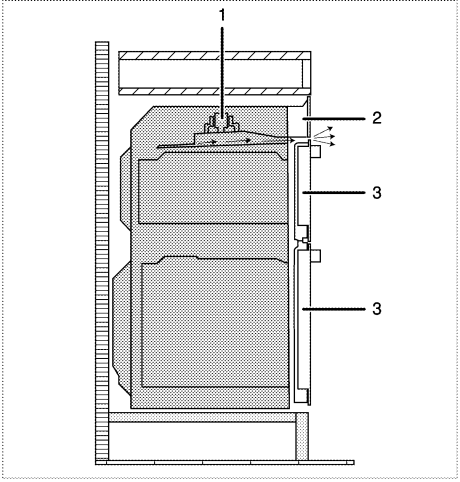

1 Cooling fan
2 Control panel
3 Door

The built-in cooling fan cools both the built-in cabinet and the front of the product.

Cooling fan continues to operate for about 20-30 minutes after the oven is switched off.

Final check

1. Plug in the power cable and switch on the product's fuse.
2. Check the functions.

Future Transportation

- Keep the product's original carton and transport the product in it. Follow the instructions on the carton. If you do not have the original carton, pack the product in bubble wrap or thick cardboard and tape it securely.
- To prevent the wire grill and tray inside the oven from damaging the oven door, place a strip of cardboard onto the inside of the oven door that lines up with the position of the trays. Tape the oven door to the side walls.
- Do not use the door or handle to lift or move the product.

Do not place any objects onto the product and move it in upright position.

Check the general appearance of your product for any damages that might have occurred during transportation.

4 Preparation

Tips for saving energy

The following information will help you to use your appliance in an ecological way, and to save energy:

- Use dark coloured or enamel coated cookware in the oven since the heat transmission will be better.
- While cooking your dishes, perform a preheating operation if it is advised in the user manual or cooking instructions.
- Do not open the door of the oven frequently during cooking.
- Try to cook more than one dish in the oven at the same time whenever possible. You can cook by placing two cooking vessels onto the wire shelf.
- Cook more than one dish one after another. The oven will already be hot.
- You can save energy by switching off your oven a few minutes before the end of the cooking time. Do not open the oven door.
- Defrost frozen dishes before cooking them.

Initial use

Time setting

Before you can use the oven, the time must be set. If the time is not set, oven will not operate.

While making any adjustment, related symbols on the clock will flash.

Press „–“ or „+“ (5/6) keys to set the time after the oven in energized for the first time.

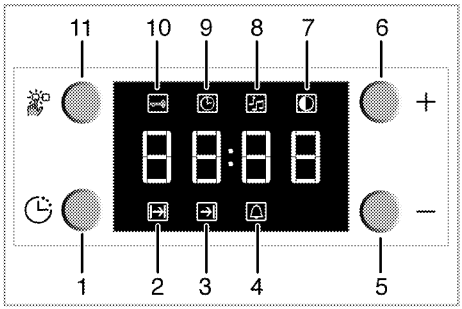

1 Program key
2 Cooking time
3 End of cooking time
4 Alarm symbol
5 Minus key
6 Plus key
7 Screen brightness setting
8 Alarm volume
9 Current time
10 Keylock
11 Adjustment key

After setting the time, you can start and end the cooking by selecting the desired position with temperature button and function button.

If the current time is not set, time setting will start increasing/moving up from **12:00**. Clock symbol *'9'* will be displayed to indicate that the current time has not been set. This symbol will disappear once the time is set.

Current time settings are cancelled in case of power failure. It needs to be readjusted.

To change the time of the day you have previously set:

1. Press (11) key to activate current time symbol *'9'*.
2. Press „–“ or „+“ (5/6) keys to set the current time.

Changing screen brightness adjustment

1. Press (11) key to activate screen brightness symbol *'7'* for screen brightness adjustment.

2. Press '–' or '+' (5/6) keys to set the desired brightness.

» Selected brightness level will appear as **d-01**, **d-02** or **d-03** on the display.

First cleaning of the appliance

The surface might get damaged by some detergents or cleaning materials.
Do not use aggressive detergents, cleaning powders/creams or any sharp objects during cleaning.
Do not use harsh abrasive cleaners or sharp metal scrapers to clean the oven door glass since they can scratch the surface, which may result in shattering of the glass.

1. Remove all packaging materials.
2. Wipe the surfaces of the appliance with a damp cloth or sponge and dry with a cloth.

Initial heating

Heat up the product for about 30 minutes and then switch it off. Thus, any production residues or layers will be burnt off and removed.

WARNING
Hot surfaces cause burns!
Product may be hot when it is in use. Never touch the hot burners, inner sections of the oven, heaters and etc. Keep children away. Always use heat resistant oven gloves when putting in or removing dishes into/from the hot oven.

Electric oven

1. Take all baking trays and the wire grill out of the oven.
2. Close the oven door.
3. Select Static position.
4. Select the highest oven power; See *How to operate the electric oven, page 17*.
5. Operate the oven for about 30 minutes.
6. Turn off your oven; See *How to operate the electric oven, page 17*

Smoke and smell may emit for a couple of hours during the initial operation. This is quite normal. Ensure that the room is well ventilated to remove the smoke and smell. Avoid directly inhaling the smoke and the smell that emits.

5 How to operate the oven

General information on baking, roasting and grilling

WARNING
Hot surfaces cause burns!
Product may be hot when it is in use. Never touch the hot burners, inner sections of the oven, heaters and etc. Keep children away. Always use heat resistant oven gloves when putting in or removing dishes into/from the hot oven.

DANGER:
Be careful when opening the oven door as steam may escape.
Exiting steam can scald your hands, face and/or eyes.

Tips for baking

- Use non-sticky coated appropriate metal plates or aluminum vessels or heat-resistant silicone moulds.
- Make best use of the space on the rack.
- Place the baking mould in the middle of the shelf.
- Select the correct rack position before turning the oven or grill on. Do not change the rack position when the oven is hot.
- Keep the oven door closed.

Tips for roasting

- Treating whole chicken, turkey and large piece of meat with dressings such as lemon juice and black pepper before cooking will increase the cooking performance.
- It takes about 15 to 30 minutes longer to roast meat with bones when compared to roasting the same size of meat without bones.
- Each centimeter of meat thickness requires approximately 4 to 5 minutes of cooking time.
- Let meat rest in the oven for about 10 minutes after the cooking time is over. The juice is better distributed all over the roast and does not run out when the meat is cut.
- Fish should be placed on the middle or lower rack in a heat-resistant plate.

Tips for grilling

When meat, fish and poultry are grilled, they quickly get brown, have a nice crust and do not get dry. Flat pieces, meat skewers and sausages are particularly suited for grilling as are vegetables with high water content such as tomatoes and onions.

- Distribute the pieces to be grilled on the wire shelf or in the baking tray with wire shelf in such a way that the space covered does not exceed the size of the heater.
- Slide the wire shelf or baking tray with grill into the desired level in the oven. If you are grilling on the wire shelf, slide the baking tray to the lower rack to collect fats. Add some water in the tray for easy cleaning.

Foods that are not suitable for grilling carry the risk of fire. Only grill food which is suitable for intensive grilling heat.
Do not place the food too far in the back of the grill. This is the hottest area and fatty food may catch fire.

How to operate the electric oven

Before you can use the oven, the time must be set. If the time is not set, oven will not operate.

Product is equipped with two ovens. Overview section indicates the relevant knobs for each oven.

How to operate the main oven

Select temperature and operating mode

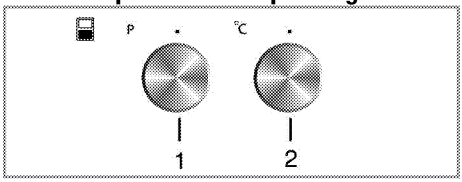

1 Main oven function knob
2 Main oven thermostat knob

Your oven is equipped with pop-out knobs that protrude when you press them.

1. Press inwards to protrude the knob and then turn it to make the desired setting.

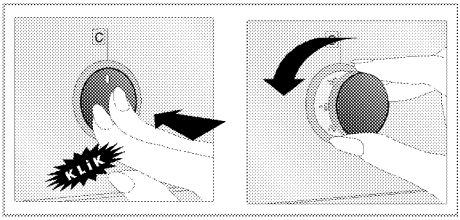

2. When the cooking process is finished, turn the knob to off (upper) position and press it inwards.
1. Set the Temperature knob to the desired temperature.
2. Set the Function knob to the desired operating mode.

» Oven heats up to the adjusted temperature and maintains it. During heating, temperature lamp stays on.

Switching off the electric oven

Turn the function knob and temperature knob to off (upper) position.

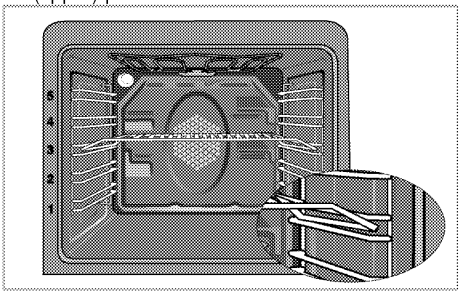

Rack positions (For models with wire shelf)

It is important to place the wire shelf onto the side rack correctly. Wire shelf must be inserted between the side racks as illustrated in the figure. Do not let the wire shelf stand against the rear wall of the oven. Slide your wire shelf to the front section of the rack and settle it with the help of the door in order to obtain a good grill performance.

Operating modes

All functions in your oven (including the main oven) are described in this section.

The order of operating modes shown here may be different from the arrangement on your product.

Oven lamp

The oven is not heated. Only the oven lamp is turned on.
Possibly, the external cooling fan will also operate to avoid heating of the compartments.

Top and bottom heating

Top and bottom heating are in operation. Food is heated simultaneously from the top and bottom. For example, it is suitable for cakes, pastries, or cakes and casseroles in baking moulds. Cook with one tray only.

Bottom heating

Only bottom heating is in operation. It is suitable for pizza and for subsequent browning of food from the bottom.

Operating with fan

The oven is not heated. Only the fan (in the rear wall) is in operation. Suitable for thawing frozen granular food slowly at room temperature and cooling down the cooked food.

Fan Heating

Warm air heated by the rear heater is evenly distributed throughout the oven rapidly by means of the fan. It is suitable for cooking your meals in different rack levels and preheating is not required in most cases. Suitable for cooking with multi trays.

Grill

Small grill at the ceiling of the oven is in operation. Suitable for grilling.

- Put small or medium-sized portions in correct shelf position under the grill heater for grilling.
- Set the temperature to maximum level.
- Turn the food after half of the grilling time.

Full grill

Large grill at the ceiling of the oven is in operation. It is suitable for grilling large amount of meat.

- Put big or medium-sized portions in correct rack position under the grill heater for grilling.
- Set the temperature to maximum level.
- Turn the food after half of the grilling time.

Using the oven clock

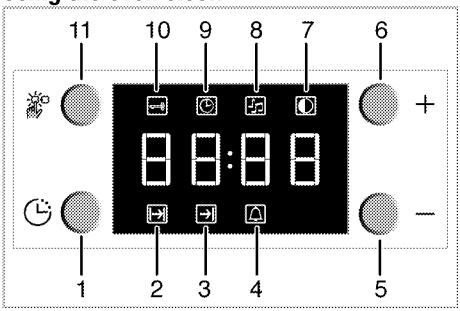

1 Program key
2 Cooking time
3 End of cooking time
4 Alarm symbol
5 Minus key
6 Plus key
7 Screen brightness setting
8 Alarm volume
9 Current time
10 Keylock
11 Adjustment key

Maximum time that can be set for end of cooking is 5 hours 59 minutes. Program will be cancelled in case of power failure. You must reprogram the oven.

While making any adjustments, related symbols will flash on the display. You must wait for a short time for the settings to take effect.

If no cooking setting is made, time of the day cannot be set.

Cooking time will be displayed once the cooking starts.

Cooking by specifying the cooking time:

You can set the oven so that it will stop at the end of the specified time by setting the cooking time on the clock.

1. To adjust the cooking time, Press Program key (1) and activate the Cooking Time symbol (2).
2. Press '–' / '+' (5/6) keys to set the cooking time.

» Once the Cooking Time is set, Cooking symbol will be displayed continuously.

If you want to set the end of cooking time to a later time:

After setting the cooking time on the clock, you can set the end of cooking time to a later time.

1. To adjust the cooking time, press Program key (1) and activate the Cooking Time symbol **(2)**.
2. Adjust the cooking time with Minus (5) and Plus (6) keys.

» Cooking Time symbol remains lit (displayed continuously) after setting the cooking time.

3. To set the End of Cooking Time, Press Program key (1) and activate the Cooking Time symbol (3).
4. Press - (5) and + (6) keys to set the end of cooking time.

» Once the End of Cooking Time is set, End of Cooking symbol and Cooking symbol will be displayed continuously. The End of Cooking Time symbol (3) will disappear as soon as the cooking starts.

5. Put your dish into the oven.
6. Select operation mode and temperature.

» Oven timer automatically calculates the startup time for cooking by using the end of cooking time and the cooking period you have set. Selected operation mode is activated when the startup time of cooking has come and the oven is heated up to the set temperature. It maintains this temperature until the end of cooking time.

7. After the cooking process is completed, **"End"** appears on the displayed and the alarm will sound.

8. Alarm signal will sound for 2 minutes. To stop the alarm signal, just press any key. Alarm will be silenced and current time will be displayed.

> If you mute the alarm by pressing any key, the oven will restart operating. If you press any button at the end of the alarm period, the oven will restart operating.

9. Turn off the oven with the Temperature knob and Function knob.

Using the keylock

Activating the keylock

You can prevent oven from being used by activating the Keylock function.

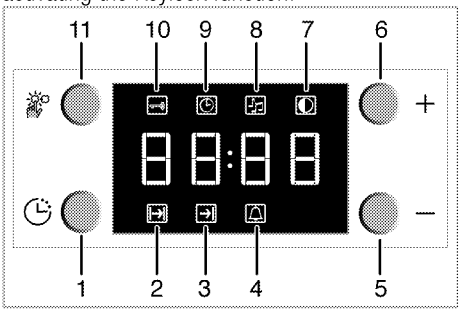

1 Program key
2 Cooking time
3 End of cooking time
4 Alarm symbol
5 Minus key
6 Plus key
7 Screen brightness setting
8 Alarm volume
9 Current time
10 Keylock
11 Adjustment key

1. Press the key (11) to activate Keylock symbol (10).

» **"OFF"** will appear on the display.

2. Press '+' key (6) to activate the keylock.

» Once the keylock is activated, **"On"** appears on the display and the Keylock symbol (10) remains lit.

> When the Keylock function is activated, control panel buttons except for the key (11) cannot be used.

Deactivating the keylock

1. Press Adjustment key (11) to activate Keylock symbol (10).

» "On" will appear on the display.

2. Press '–' (5) to deactivate the keylock.

» "OFF" will be displayed once the keylock is deactivated.

Using the clock as an alarm

You can use the clock of the product for any warning or reminder apart from the cooking programme.

The alarm clock has no influence on the functions of the oven. It is only used as a warning. For example, this is useful when you want to turn food in the oven at a certain point of time. Alarm clock will give a signal once the time you set is over.

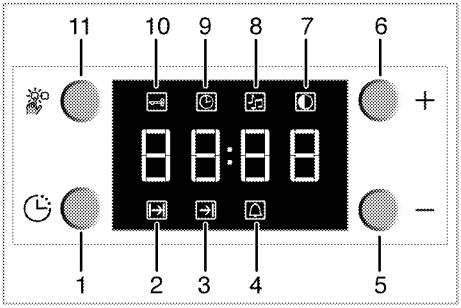

1 Program key
2 Cooking time
3 End of cooking time
4 Alarm symbol
5 Minus key
6 Plus key
7 Screen brightness setting
8 Alarm volume
9 Current time
10 Keylock
11 Adjustment key

Setting the alarm clock

1. Press Program key (1) to activate the alarm time symbol (4).

> Maximum alarm time can be 23 hours and 59 minutes.

2. Adjust the alarm time using **„+"** /**„–"** (5/6) keys.

» Alarm symbol will remain lit and the alarm time will appear on the display once the alarm time is set.

3. At the end of the alarm time, Alarm Time symbol (4) will start flashing and the alarm signal is heard.

Turning off the alarm

1. To stop the alarm, just press any key.

» Alarm will be silenced and current time will be displayed.

If you want to cancel the alarm:

1. To reset the alarm time, press Program key (1) to activate the alarm time symbol (4).
2. Press and hold the '–' (5) key until "00:00" is displayed.

Alarm time will be displayed. If the alarm time and cooking time are set concurrently, shortest time will be displayed.

Changing alarm tone

1. Press Setting key (11) to activate the Alarm Tone symbol (8).
2. Adjust the desired tone using **„+"** /**„–"** (5/6) keys.

» Selected alarm tone will appear as **"b-01"**, **"b-02"** or **"b-03"** on the display.

Cooking times table

The timings in this chart are meant as a guide. Timings may vary due to temperature of food, thickness, type and your own preference of cooking.

Baking and roasting

1st rack of the oven is the **bottom** rack.

Dish	Cooking level number		Rack position	Temperature (°C)	Cooking time (approx. in min.)
Cakes in tray*	One level		3	175	30 ... 40
	2 levels		1 - 5	175	45 ... 50
Cakes in mould*	One level		2	175	50 .. 60
Cakes in cooking paper*	One level		3	175	25 ... 35
	2 levels		1 - 5	175	35 .. 45
	3 levels		1 - 3 - 5	180	45 ... 55
Sponge cake*	One level		3	200	8 ... 15
Cookies*	One level		3	175	25 ... 30
	2 levels		1 - 5	170 ... 190	35 .. 45
	3 levels		1 - 3 - 5	175	30 ... 40
Dough pastry*	One level		3	200	35 .. 45
	2 levels		1 - 5	200	50 ... 60
	3 levels		1 - 3 - 5	200	55 .. 65
Rich pastry*	One level		3	200	25 ... 35
	2 levels		1 - 5	200	35 .. 45
	3 levels		1 - 3 - 5	190	45 ... 55
Leaven*	One level		3	200	35 .. 45
Lasagna*	One level		3	200	30 ... 40
Beef steak (whole) / Roast	One level		3	25 min. 250/max, then 180 ... 190	100 ... 120
Leg of Lamb (casserole)	One level		3	25 min. 220 then 180 ... 190	70 ... 90
Roasted chicken	One level		2	15 min. 250/max, then 190	55 .. 65
Turkey (5.5 kg)	One level		1	25 min. 250/max, then 190	150 ... 210
Fish	One level		3	200	20 .. 30

When cooking with 2 trays at the same time, place the deeper tray on the upper rack and the other one on the lower rack.
* It is suggested to perform preheating for all foods.

(**) In a cooking that requires preheating, preheat at the beginning of cooking until the thermostat lamp turns off.

Tips for baking cake

- If the cake is too dry, increase the temperature by 10°C and decrease the cooking time.
- If the cake is wet, use less liquid or lower the temperature by 10°C.
- If the cake is too dark on top, place it on a lower rack, lower the temperature and increase the cooking time.
- If cooked well on the inside but sticky on the outside use less liquid, lower the temperature and increase the cooking time.

Tips for baking pastry

- If the pastry is too dry, increase the temperature by 10°C and decrease the cooking time. Dampen the layers of dough with a sauce composed of milk, oil, egg and yoghurt.
- If the pastry takes too long to bake, pay care that the thickness of the pastry you have prepared does not exceed the depth of the tray.
- If the upper side of the pastry gets browned, but the lower part is not cooked, make sure that the amount of sauce you have used for the pastry is not too much at the bottom of the pastry. Try to scatter the sauce equally between the dough layers and on the top of pastry for an even browning.

Cook the pastry in accordance with the mode and temperature given in the cooking table. If the bottom part is still not browned enough, place it on one lower rack next time.

Tips for cooking vegetables

- If the vegetable dish runs out of juice and gets too dry, cook it in a pan with a lid instead of a tray. Closed vessels will preserve the juice of the dish.
- If a vegetable dish does not get cooked, boil the vegetables beforehand or prepare them like canned food and put in the oven.

How to operate the top oven

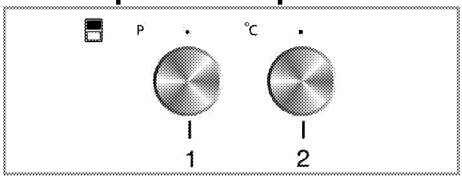

1 Top oven function knob

2 Top oven thermostat knob

Operating modes of the electric oven are selected with Function knob. Temperature setting is made with Thermostat knob.
All oven functions are turned off by turning the relevant knob to Off (upper) position.

Select temperature and operating mode

1. Set the Thermostat knob to the desired temperature.
2. Set the Function knob to the desired operating mode.

» Oven heats up to the adjusted temperature and maintains it. During heating and cooling, thermostat light turns on.

Switching off the electric oven

Turn the Function knob and thermostat knob to Off (upper) position.

Cooking times table

The timings in this chart are meant as a guide. Timings may vary due to temperature of food, thickness, type and your own preference of cooking.

Maximum load capacity of oven tray: 4 kg (8.8 lb).

1st rack of the oven is the **bottom** rack.

- Do not place cookware with rough bases on the oven door.
- Ensure that there is at least 25mm space at top of oven when cooking larger foods or using taller cookware.

Baking and roasting

1st rack of the oven is the **bottom** rack.

Food	Cooking level number	Position	Rack position	Temperature (°C)	Cooking time (min.) (approx.)
Cake in tray	One level		2	175	25 ... 30
Cake in mould	One level		1	175	25 ... 30
Cakes in paper	One level		1	175	25 ... 30
Sponge cake	One level		2	200	5 ... 10
Cookies	One level		2	175	25 ... 30
Dough pastry	One level		2	200	35 ... 40
Filled savory pastry	One level		1	180	25 ... 35
Leaven	One level		1	190	35 ... 45
Lasagna	One level		1	180	30 ... 40
Pizza	One level		1	200	15 ... 20
Beefsteak (whole)/ Roast	One level		2	25 min. 250 after 180 ... 190	100 ... 120
Lamb haunch (casserole)	One level		2	25 min. 220 after 180 ... 190	70 ... 90
Roast chicken	One level		1	15 min. 250 after 190	55 ... 65
Turkey (5.5 kg)	One level		1	25 min. 250 after 190	150 ... 210
Fish	One level		2	200	20 ... 30

How to operate the top grill

WARNING
Close oven door during grilling.
Hot surfaces may cause burns!

Switching on the grill

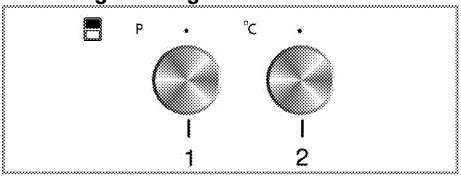

1 Top oven function knob
2 Top oven thermostat knob

1. Set the Function knob to Grill symbol.
2. Set the temperature to maximum level.
3. If required, perform a preheating of about 5 minutes.

» Thermostat (temperature) light turns on.

Switching off the grill

1. Turn the Grill control knob to Off (upper) position.

- Put big or medium-sized portions in correct rack position under the grill heater for grilling.
- For food only whose top is required to be roasted, grill the food either by placing onto the wire grill in the tray or by placing the tray onto the floor of grilling compartment.
- Food and plates placed onto the floor of grill compartment will get heated when the main oven is in use. Do not switch on the grill compartment when using it for storing food.

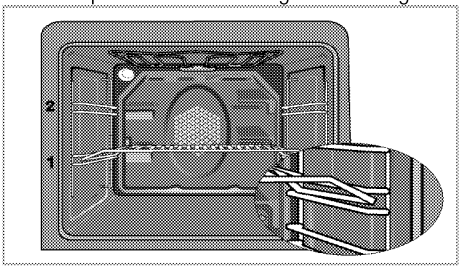

Foods that are not suitable for grilling carry the risk of fire. Only grill food which is suitable for intensive grilling heat.
Do not place the food too far in the back of the grill. This is the hottest area and fatty food may catch fire.

Top oven cooking times table for grilling

Grilling with electric grill

1st rack of the oven is the **bottom** rack.

Food	Insertion level	Grilling time (approx.)
Fish	1...2	20...25 min. #
Sliced chicken	1...2	25...35 min.
Lamb chops	1...2	20...25 min.
Roast beef	1...2	25...30 min. #
Veal chops	1...2	25...30 min. #
Toast bread	1...2	1...2 min.
# depending on thickness		

6 Maintenance and care

General information

Service life of the product will extend and the possibility of problems will decrease if the product is cleaned at regular intervals.

DANGER:
Disconnect the product from mains supply before starting maintenance and cleaning works.
There is the risk of electric shock!

DANGER:
Allow the product to cool down before you clean it.
Hot surfaces may cause burns!

- Clean the product thoroughly after each use. In this way it will be possible to remove cooking residues more easily, thus avoiding these from burning the next time the appliance is used.
- No special cleaning agents are required for cleaning the product. Use warm water with washing liquid, a soft cloth or sponge to clean the product and wipe it with a dry cloth.
- Always ensure any excess liquid is thoroughly wiped off after cleaning and any spillage is immediately wiped dry.
- Do not use cleaning agents that contain acid or chloride to clean the stainless or inox surfaces and the handle. Use a soft cloth with a liquid detergent (not abrasive) to wipe those parts clean, paying attention to sweep in one direction.

The surface might get damaged by some detergents or cleaning materials.
Do not use aggressive detergents, cleaning powders/creams or any sharp objects during cleaning.
Do not use harsh abrasive cleaners or sharp metal scrapers to clean the oven door glass since they can scratch the surface, which may result in shattering of the glass.

Do not use steam cleaners to clean the appliance as this may cause an electric shock.

Cleaning the control panel

Clean the control panel and knobs with a damp cloth and wipe them dry.

Do not remove the control buttons/knobs to clean the control panel.
Control panel may get damaged!

Cleaning the oven

To clean the side wall

1. Remove the front section of the side rack by pulling it in the opposite direction of the side wall.
2. Remove the side rack completely by pulling it towards you.

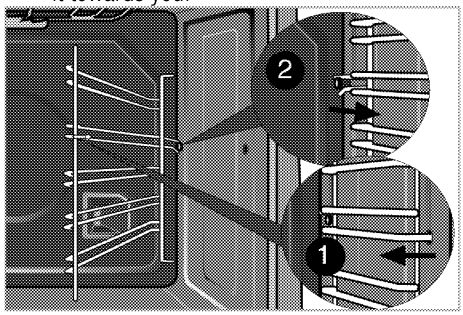

Catalytic walls

Side walls or just back wall of oven interior may be covered with catalytic enamel.
The catalytic walls of the oven must not be cleaned. The porous surface of the walls is self-cleaning by absorbing and converting spitting fat (steam and carbon dioxide).

Clean oven ceiling

The grill element can be folded out for cleaning the oven ceiling.

1. Loosing locking screws at the grill element with a screwdriver or a coin.

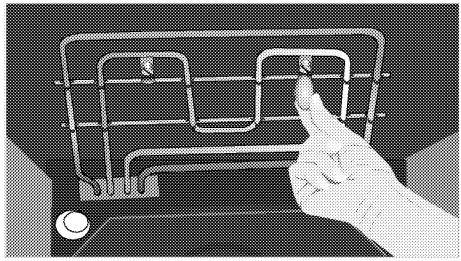

The grill element folds down. It remains anchored at the oven ceiling.

2. Clean oven ceiling with a damp cloth.

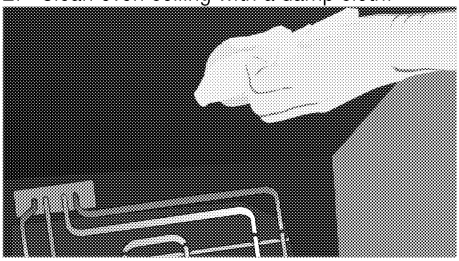

3. Fold the grill element up again and tighten the locking screws with a screwdriver or a coin.

Clean oven door

To clean the oven door, use warm water with washing liquid, a soft cloth or sponge to clean the product and wipe it with a dry cloth.

Don't use any harsh abrasive cleaners or sharp metal scrapers for cleaning the oven door. They could scratch the surface and destroy the glass.

Removing the oven door

1. Open the front door (1).
2. Open the clips at the hinge housing (2) on the right and left hand sides of the front door by pressing them down as illustrated in the figure.

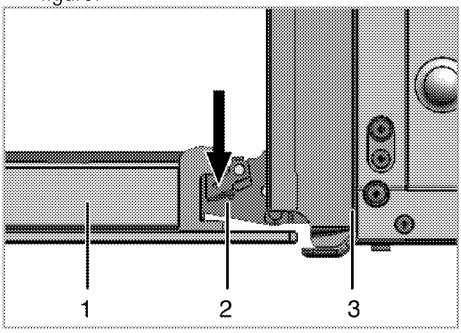

1 Front door
2 Hinge
3 Oven

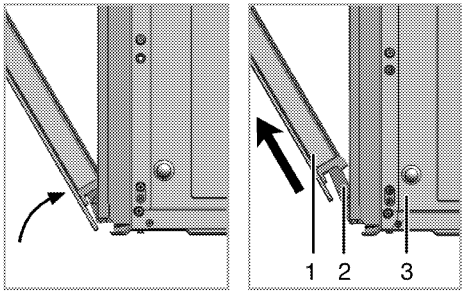

3. Move the front door to half-way.
4. Remove the front door by pulling it upwards to release it from the right and left hinges.

Steps carried out during removing process should be performed in reverse order to install the door. Do not forget to close the clips at the hinge housing when reinstalling the door.

Removing the door inner glass

The entire inner glass panel of the oven door can be removed for cleaning.

Install the inner glass panel so that the printed side will face upwards.

Open the oven door.

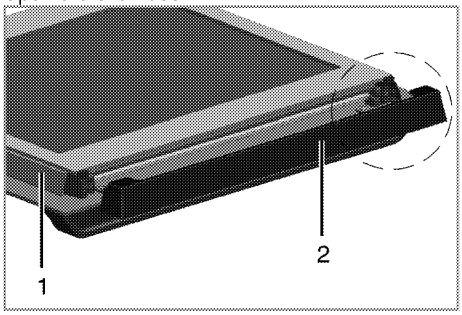

1 Frame
2 Plastic part

Pull towards yourself and remove the plastic part installed to upper section of the front door.

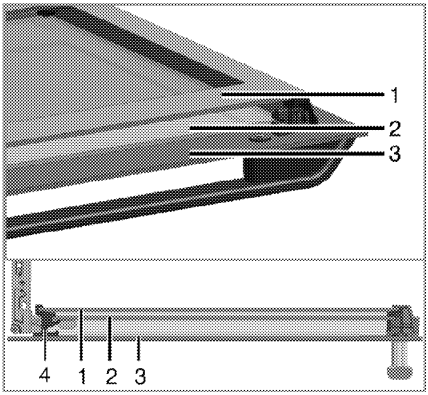

1 Innermost glass panel
2 Inner glass panel
3 Outer glass panel
4 Plastic glass panel slot-Lower

As illustrated in figure, raise the innermost glass panel (1) slightly in direction A and pull it out in direction B.

Repeat the same procedure to remove the inner glass panel (2).

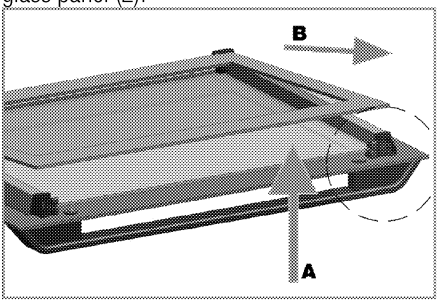

The first step to regroup the door is reinstalling inner glass panel (2).

As illustrated in figure, place the chamfered corner of the glass panel so that it will rest in the chamfered corner of the plastic slot.

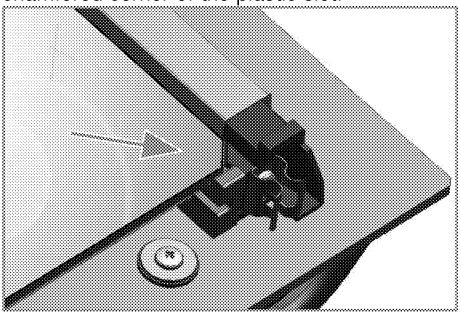

Inner glass panel (2) must be installed into the plastic slot close the innermost glass panel (1). When installing the innermost glass panel (1), make sure that the printed side of the panel faces towards the inner glass panel.

It is important to seat lower corner of inner glass panel into the lower plastic slot.

Push the plastic part towards the frame until you hear a "click".

Replacing the oven lamp

DANGER:
Before replacing the oven lamp, make sure that the product is disconnected from mains and cooled down in order to avoid the risk of an electrical shock.
Hot surfaces may cause burns!

The oven lamp is a special electric light bulb that can resist up to 300 °C. See *Technical specifications, page 10* for details. Oven lamps can be obtained from Authorised Service Agents.

Position of lamp might vary from the figure.

If your oven is equipped with a round lamp:

1. Disconnect the product from mains.
2. Turn the glass cover counter clockwise to remove it.

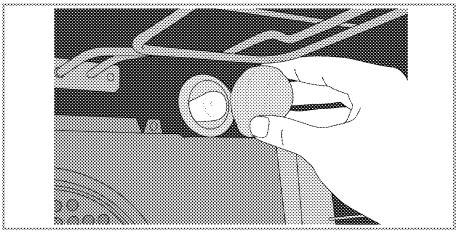

3. Remove the oven lamp by turning it counter clockwise and replace it with the new one.
4. Install the glass cover.

7 Troubleshooting

Oven emits steam when it is in use.

- It is normal that steam escapes during operation. >>> *This is not a fault.*

Product emits metal noises while heating and cooling.

- When the metal parts are heated, they may expand and cause noise. >>> *This is not a fault.*

Product does not operate.

- The mains fuse is defective or has tripped. >>> *Check fuses in the fuse box. If necessary, replace or reset them.*
- Product is not plugged into the (grounded) socket. >>> *Check the plug connection.*
- Buttons/knobs/keys on the control panel do not function. >>> *Keylock may be enabled. Please disable it. (See. Using the keylock, page 20)*

Oven light does not work.

- Oven lamp is defective. >>> *Replace oven lamp.*
- Power is cut. >>> *Check if there is power. Check the fuses in the fuse box. If necessary, replace or reset the fuses.*

Oven does not heat.

- Function and/or Temperature are not set. >>> *Set the function and the temperature with the Function and/or Temperature knob/key.*
- In models equipped with a timer, the timer is not adjusted. >>> *Adjust the time.*
  (In products with microwave oven, timer controls only microwave oven.)
- Power is cut. >>> *Check if there is power. Check the fuses in the fuse box. If necessary, replace or reset the fuses.*

(In models with timer) Clock display is blinking or clock symbol is on.

- A previous power outage has occurred. >>> *Adjust the time / Switch of the product and switch it on again.*

Consult the Authorised Service Agent or the dealer where you have purchased the product if you can not remedy the trouble although you have implemented the instructions in this section. Never attempt to repair a defective product yourself.

8 Guarantee and Service

Please keep your purchase receipt or other proof of purchase in a safe place; you will need to have it should the product require attention under guarantee.

You should also complete the details below; it will help us assist you when requesting service. (The model number is printed on the Instruction Booklet and the serial number is printed on the Rating Label affixed to the appliance)

Model No:

Serial No:

Retailer:

Date of purchase:

For service under guarantee simply telephone the appropriate number below

UK Mainland & Northern Ireland

Fridges & Freezers	0845 6046859
Electric Cookers	0845 6046859
Gas & Dual Fuel Cookers	0845 6046859
Washing Machines & Dishwashers	0845 6046859

Republic of Ireland

All Refrigeration, All Cookers Washing Machines & Dishwashers	01 862 3411

Before requesting service please check the trouble-shooting guide in the Operating Instructions as a charge may be levied where no fault is found even though your product may still be under guarantee.

Should you experience any difficulty in obtaining service please contact the Blomberg Customer Help-Line.
Tel: 0845 604 6859

9 Guarantee Details

Your new **BLOMBER**G product is guaranteed against the cost of breakdown repairs for three years from the date of the original purchase.

What is covered?
- Repairs necessary as a result of faulty materials, defective components or manufacturing defect.
- The cost of functional replacement parts, but excluding consumable items.
- The labour costs of a BLOMBERG approved repairer to carry out the repair.

What is not covered?
- Transit, delivery or accidental damage or misuse and abuse.
- Cabinet or appearance parts, including knobs, flaps, handles or container lids.
- Accessories or consumable items including but not limited to, ice trays, scrapers, cutlery baskets, filters and light bulbs.
- Repairs required as a result of unauthorised repair or inexpert installation that fails to meet the requirements contained in the user instruction book.
- Repairs to products used on commercial or non-residential household premises.
- Loss of frozen food in freezers or fridge/freezers. (Food loss insurance is often included within your household contents insurance policy, or may be available separately from your retailer).

Important notes.
- Your BLOMBERG product is designed and built for domestic household use only.
- The guarantee will be void if the product is installed or used in commercial or non-residential domestic household premises.
- The product must be correctly installed, located and operated in accordance with the instructions contained in the User Instructions Booklet provided.
- Professional installation by a qualified Electrical Domestic Appliance Installer is recommended for all Washing Machines, Dishwashers and Electric Cookers
- Gas Cookers must only be installed by a Gas Safe (or BORD GAIS) registered Gas Installer.
- The guarantee is given only within the boundaries of the United Kingdom and the Republic of Ireland.
- The guarantee is applicable only to new products and is not transferable if the product is resold.
- BLOMBERG disclaims any liability for incidental or consequential damages.

The guarantee does not in anyway diminish your statutory or legal rights.

Blomberg, 36-38 Caxton Way, Watford, Hertfordshire, WD18 8UF
Tel: 0845 6048340 Fax: 0845 6004922
email: service@blomberguk.com www.blomberguk.com

285.4424.27/R.AA/24.05.2013